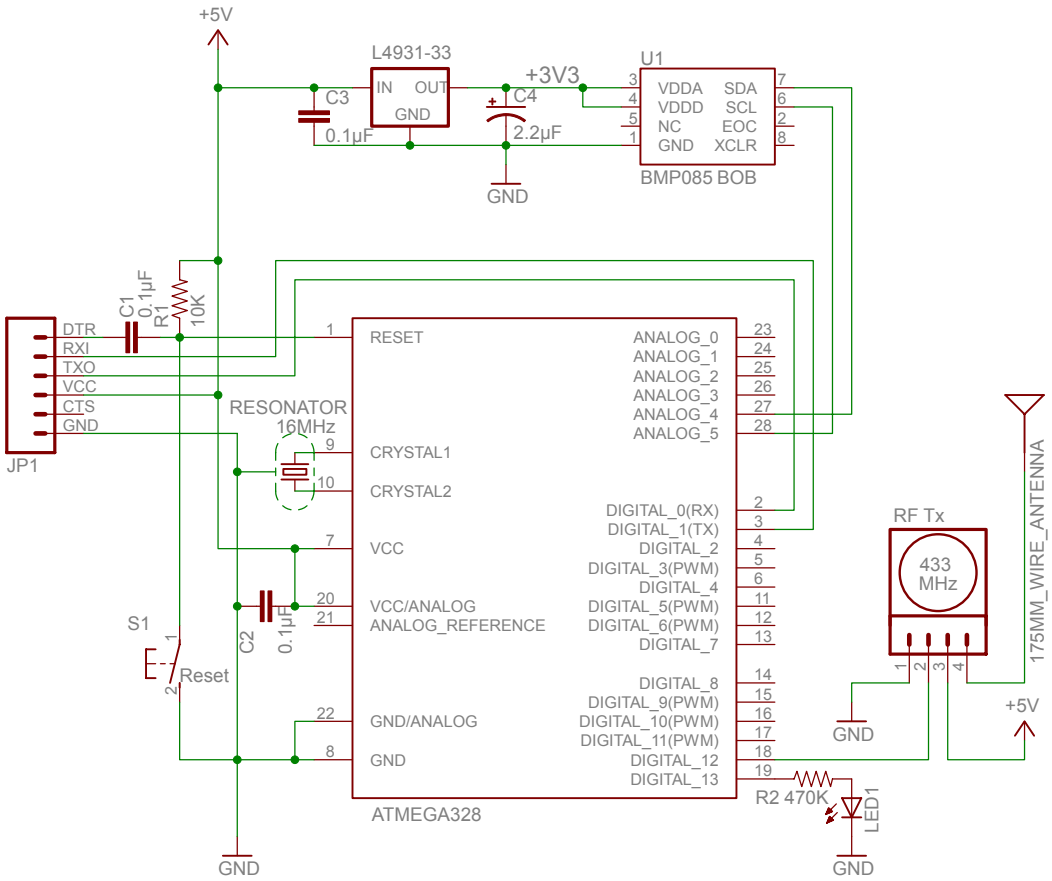

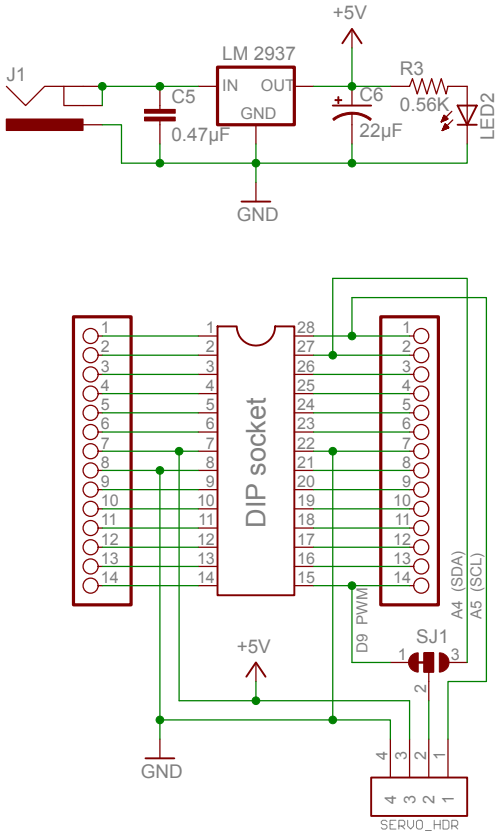

Ardweeny "BackPack" board (Not used in flight)

Tx-ing vario module using an Ardweeny I/O board

Released under the CC-BY-SA 3.0 License

Loxia labs

TITLE: Ardweeny_with_Variometer_and_RF433_Tx

Document Number:

REV:

Date: 2012-01-26 16:11:44

Sheet: 1/1