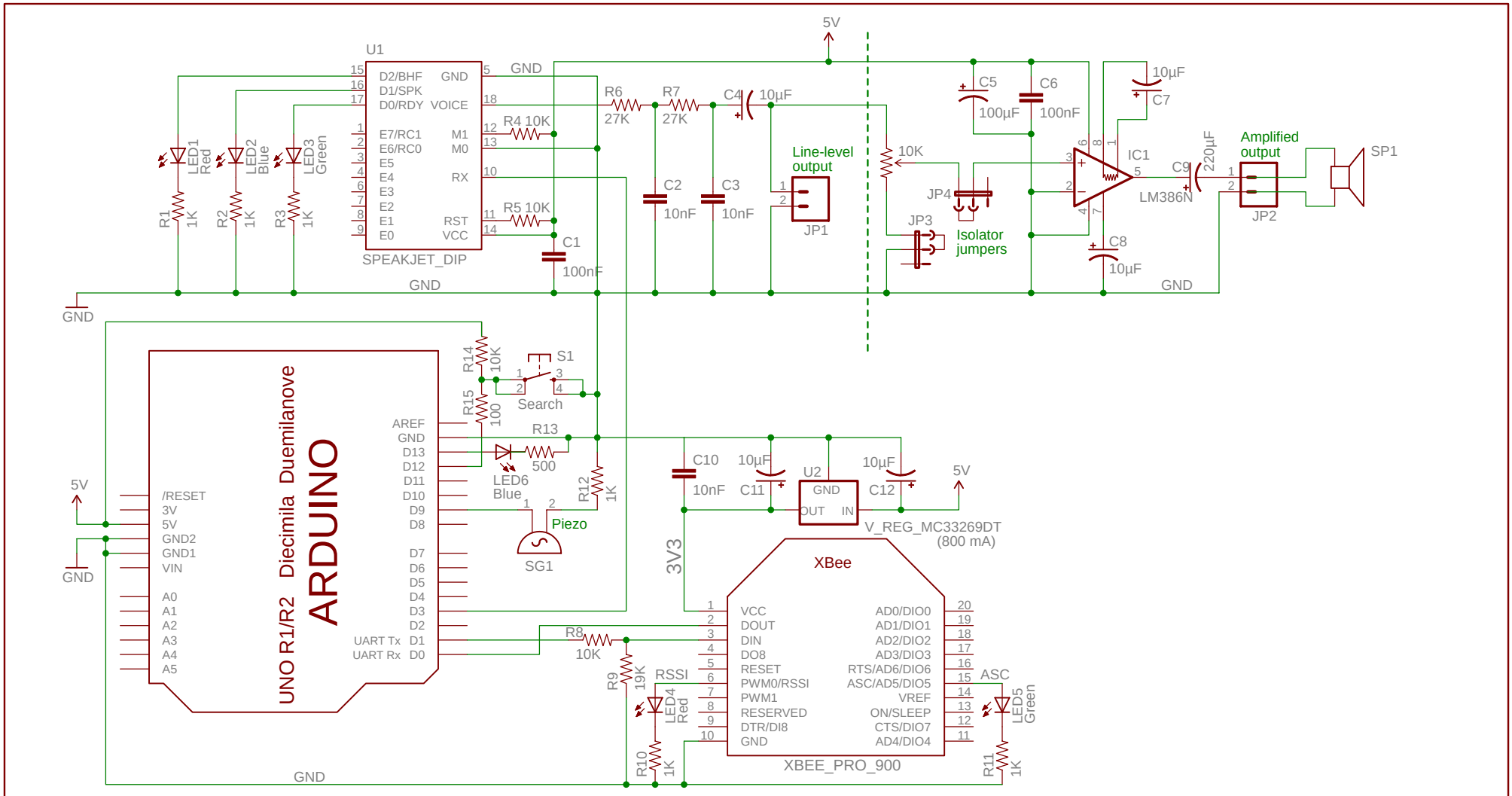

Loxia labs

TITLE: XBee-Piezo-SpeakJet_shield.v2

Document Number:

REV:

Date: 2012-09-28 22:31:58

Sheet: 1/1

Released under the CC-BY-SA 3.0 License